TECEambia (2003 – 2020) + (2021, ...)

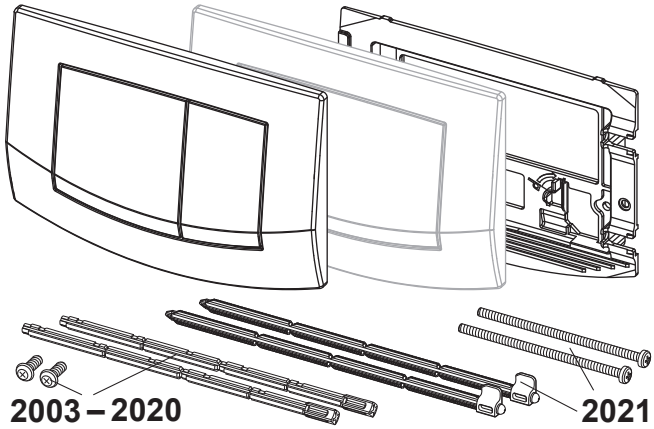

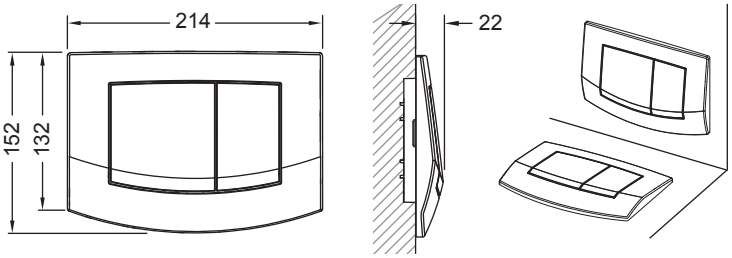

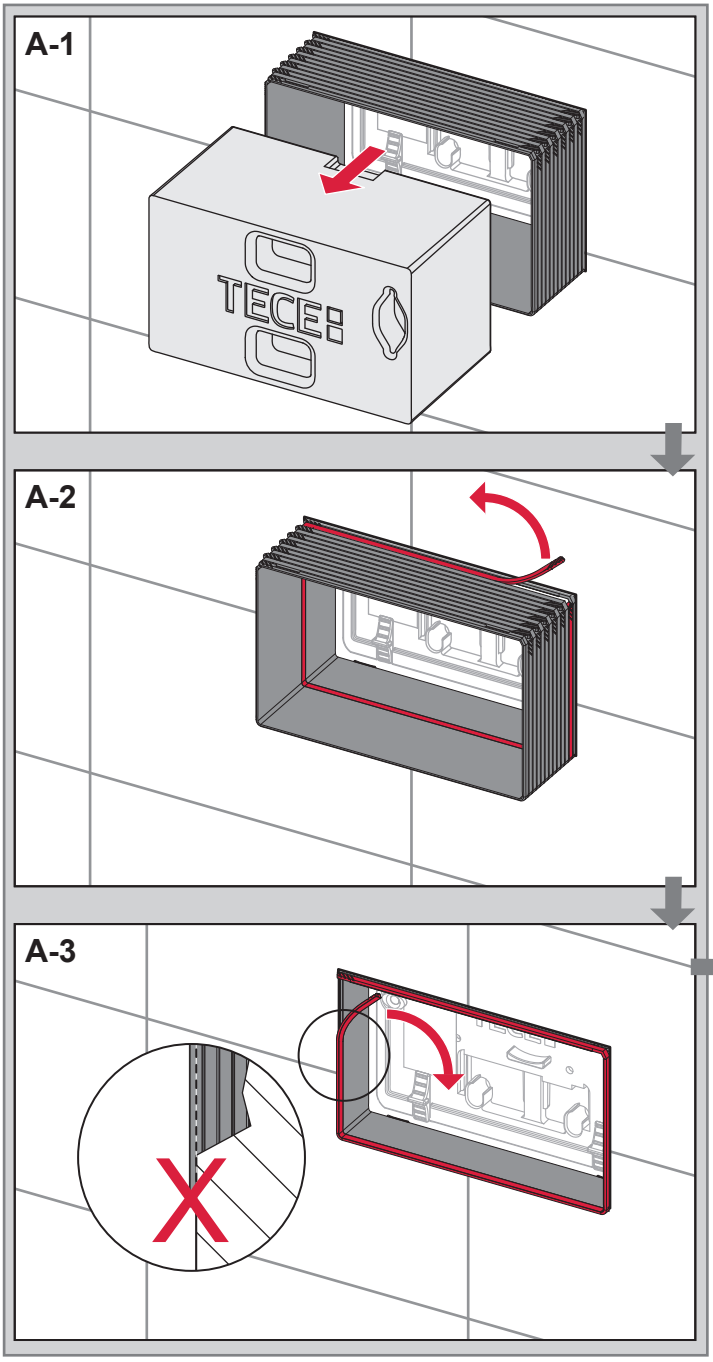

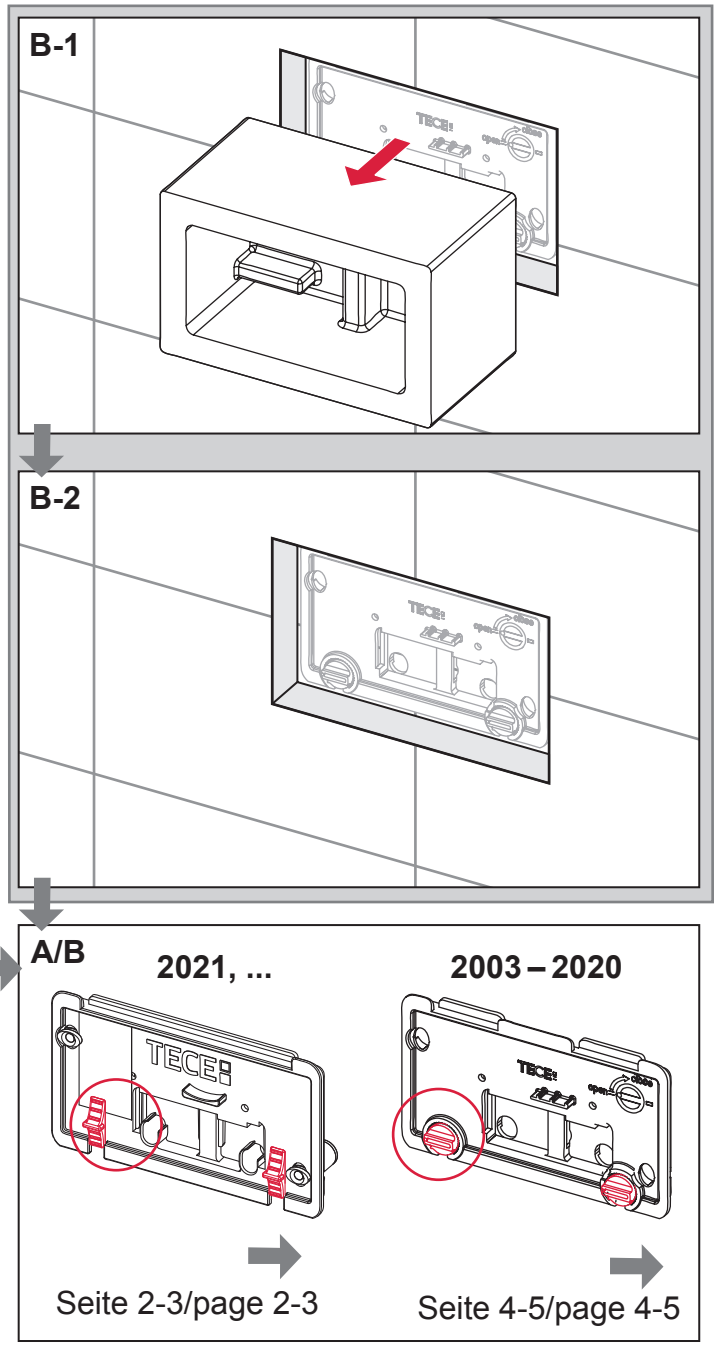

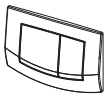

1

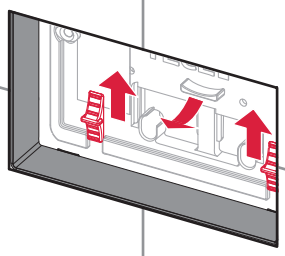

2

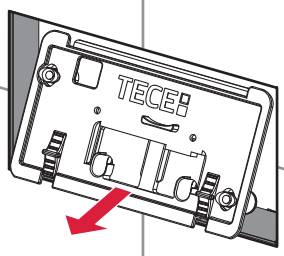

3 A A = Uni /Octa

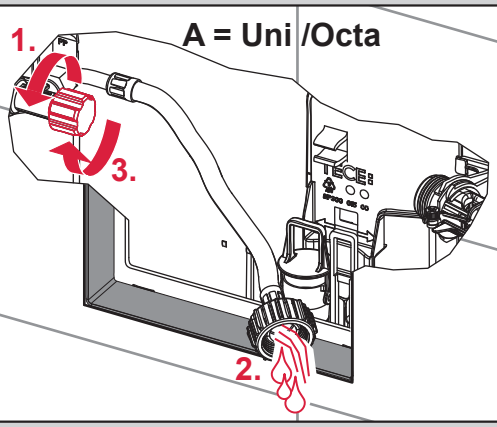

3 B B = Base

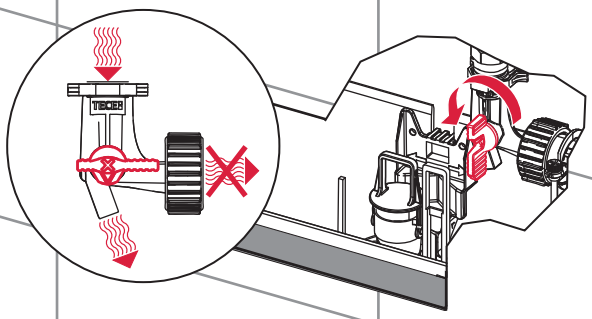

4 A

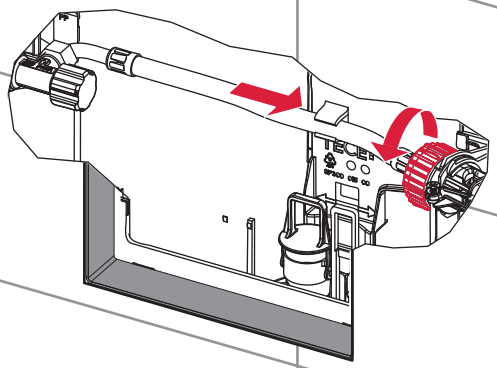

4 B

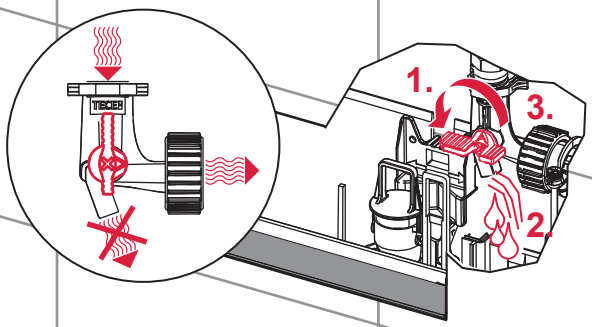

5 A/B

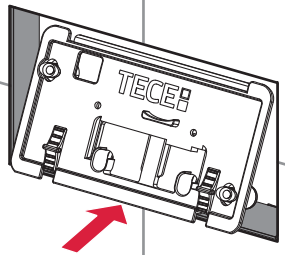

6

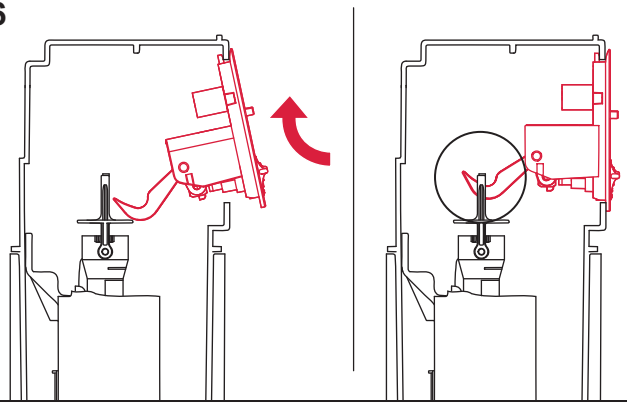

TECE

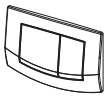

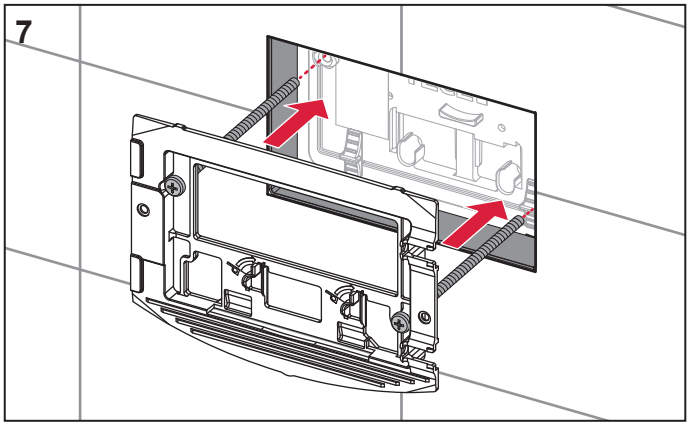
7

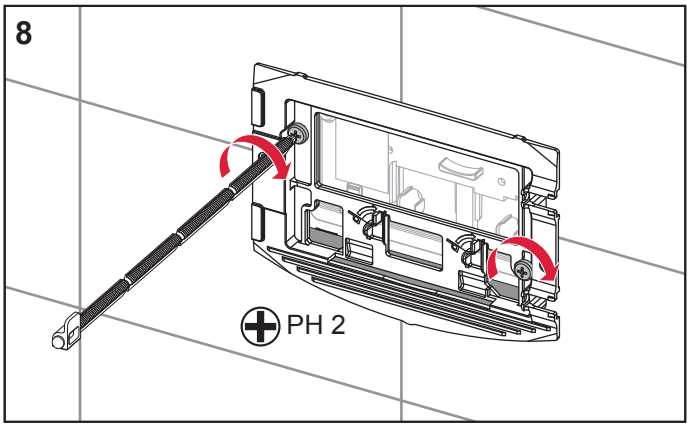
8
PH 2

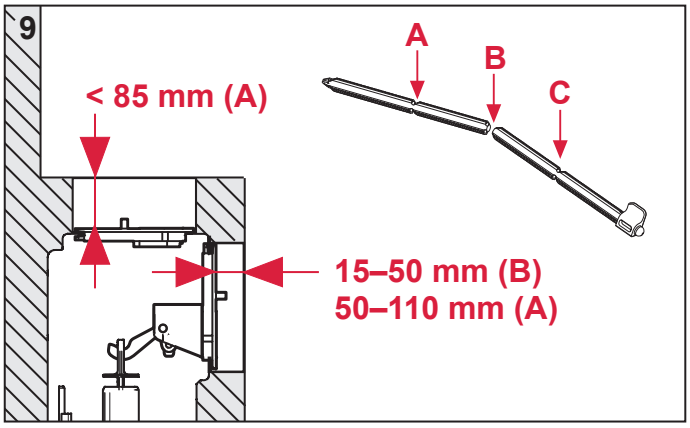
9
A
B
C
< 85 mm (A)
15–50 mm (B)
50–110 mm (A)

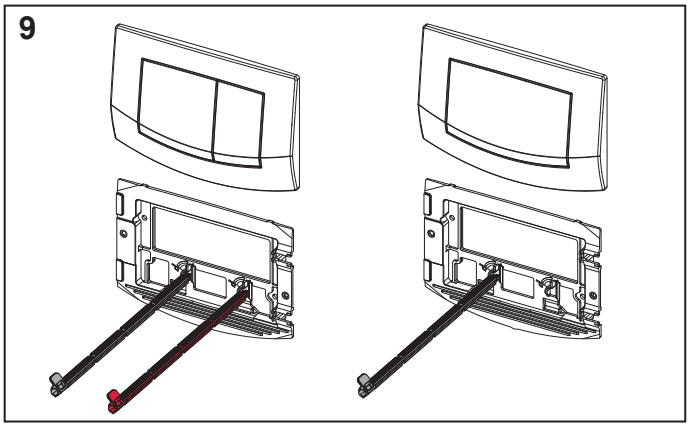
9

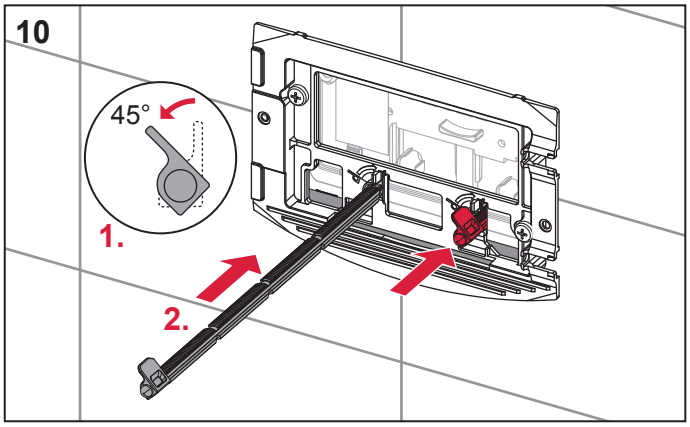
10
45°
1.
2.

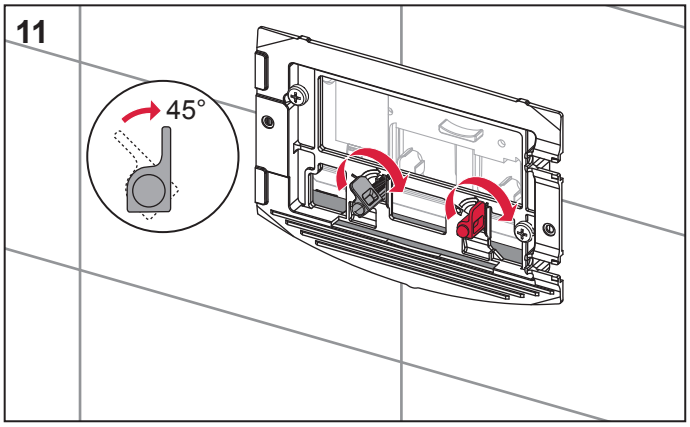
11
45°

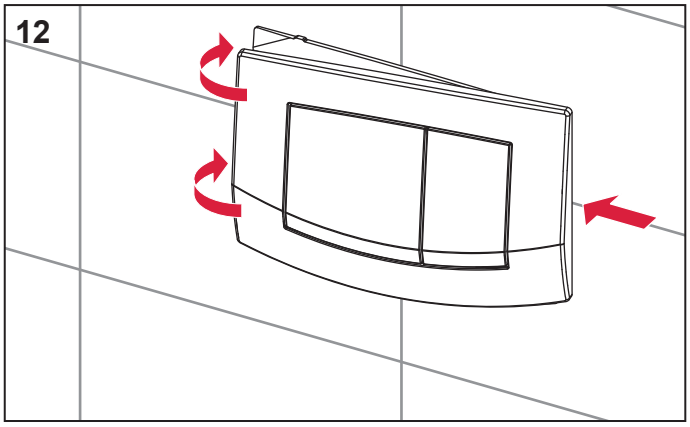
12

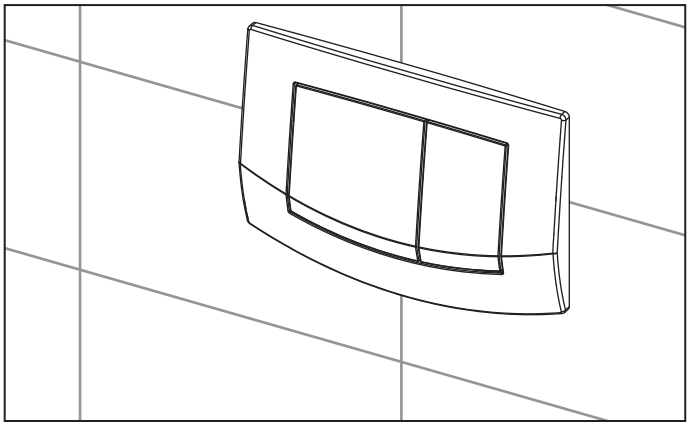

TECEambia (2003 – 2020)

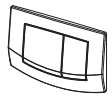

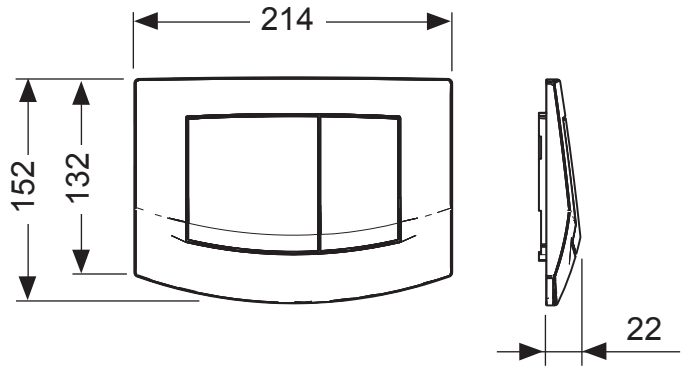

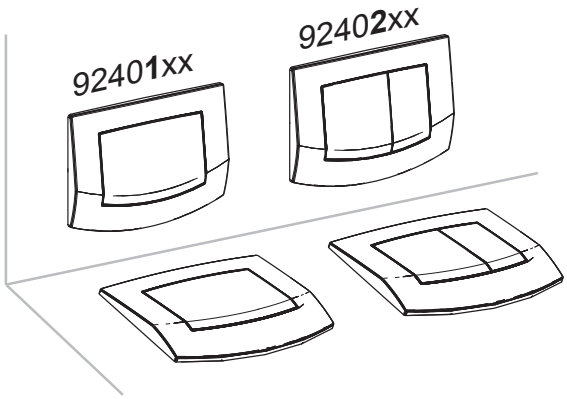

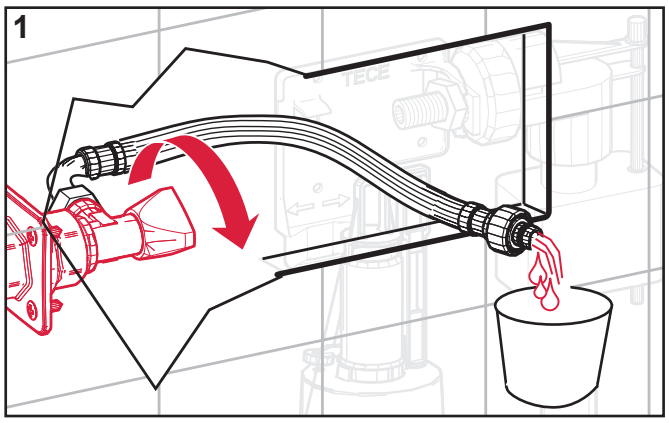

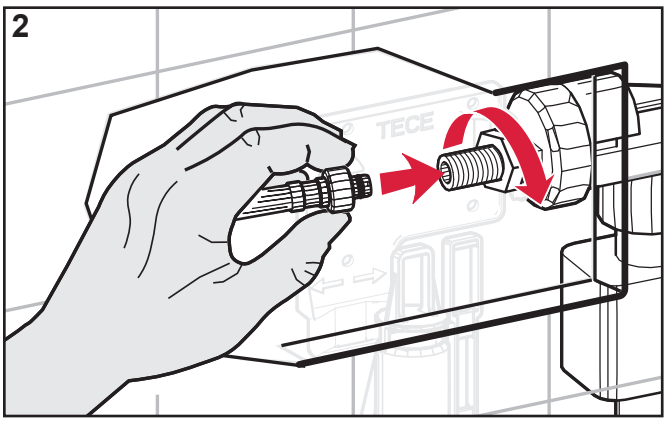

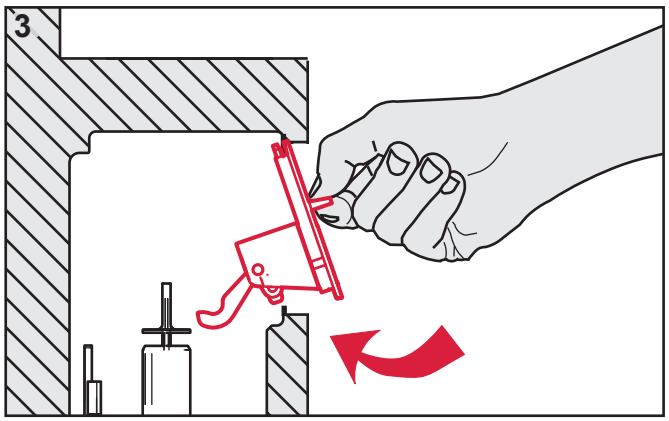

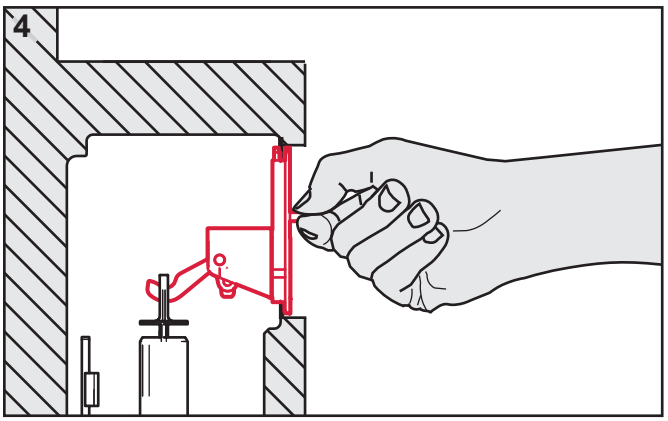

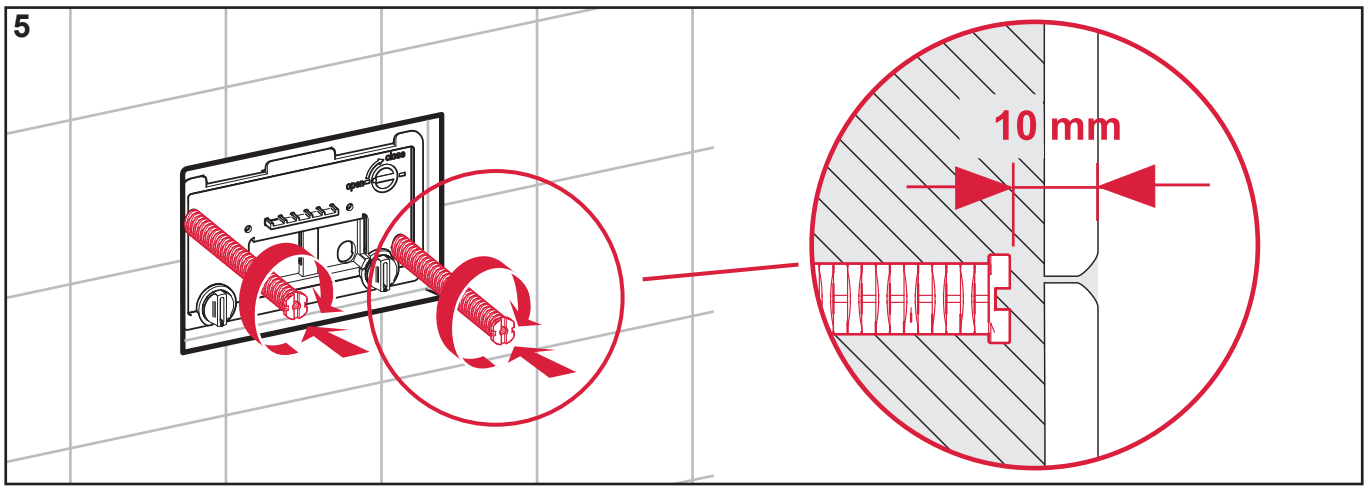

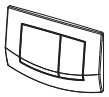

6

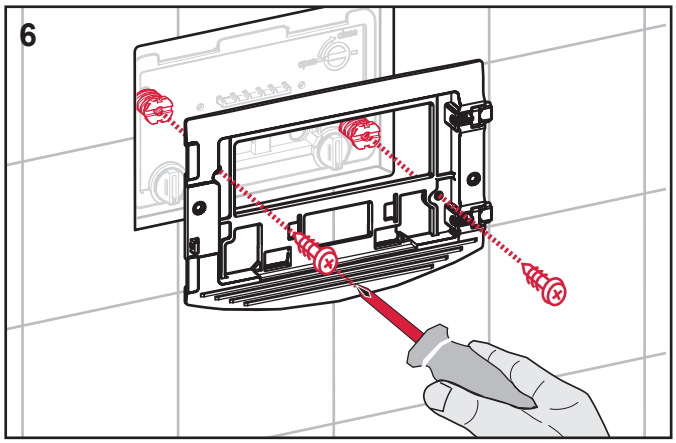

7

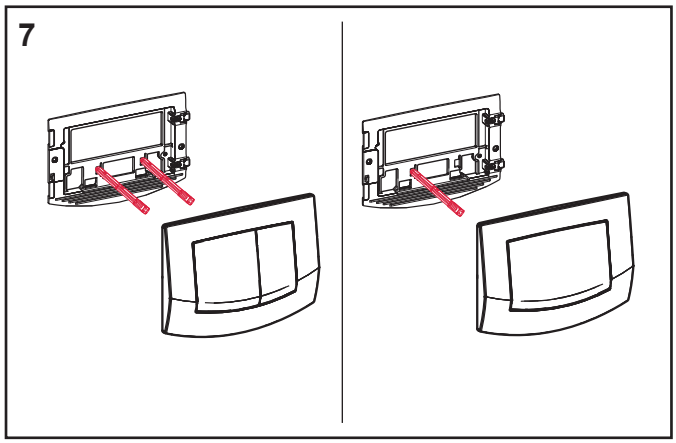

8

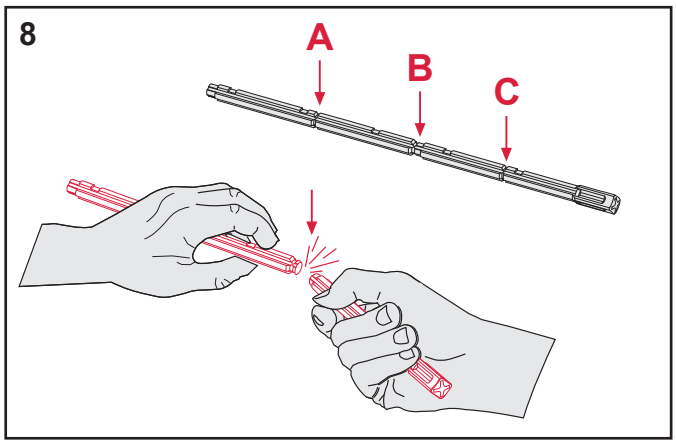

9

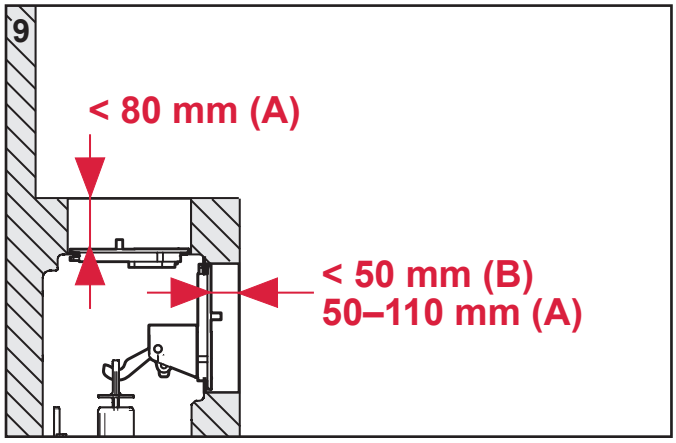

10

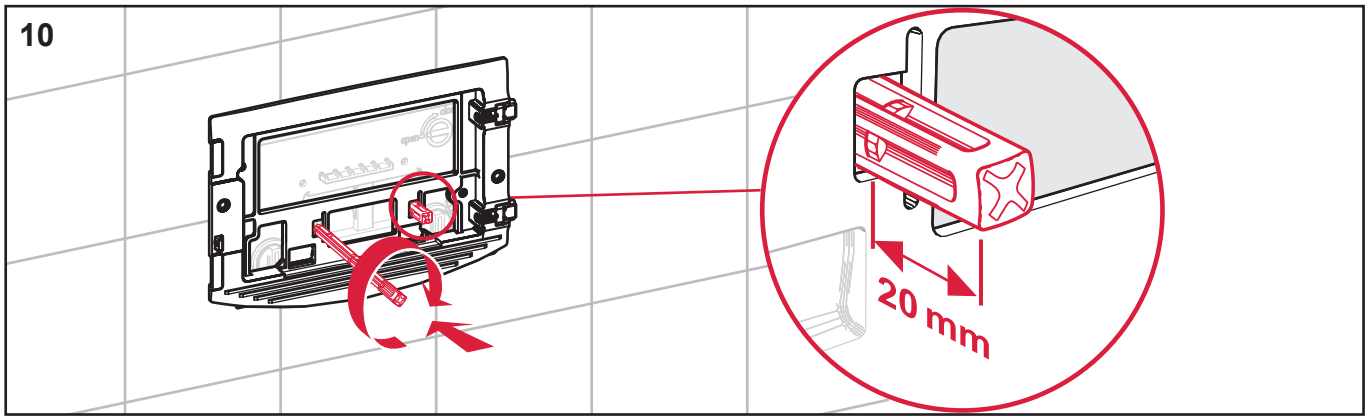

11

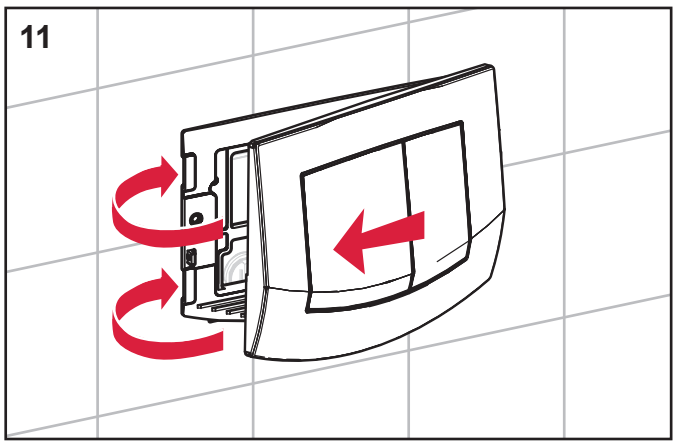

12

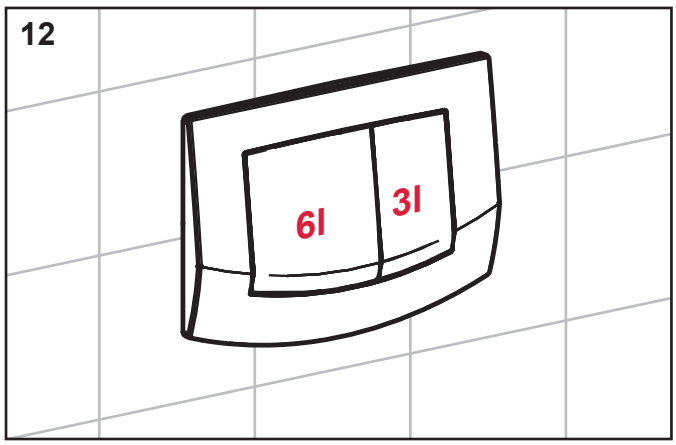

TECE

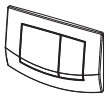

SP430 139 00 a