Installationsvejledning
Montageanweisung
Installation instruction
Instructions d'installation
Istruzioni di installazione
Installatie- -instructies
Instrucciones de instalación

damixa™

Hvidkærvej 48, 5250 Odense SV
Tlf. +45 88 33 00 34
damixa-international@fmm-mora.com
www.damixa.com

10.21 20134.00

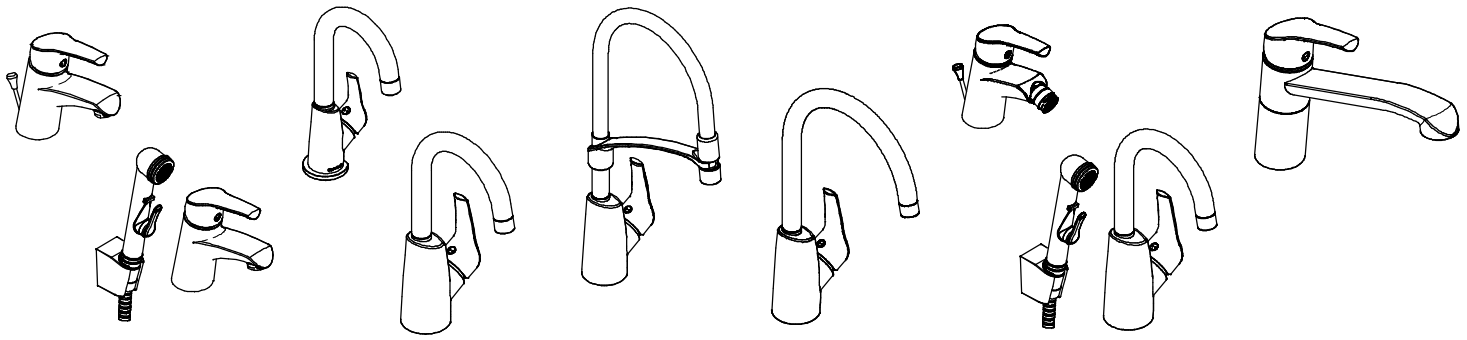

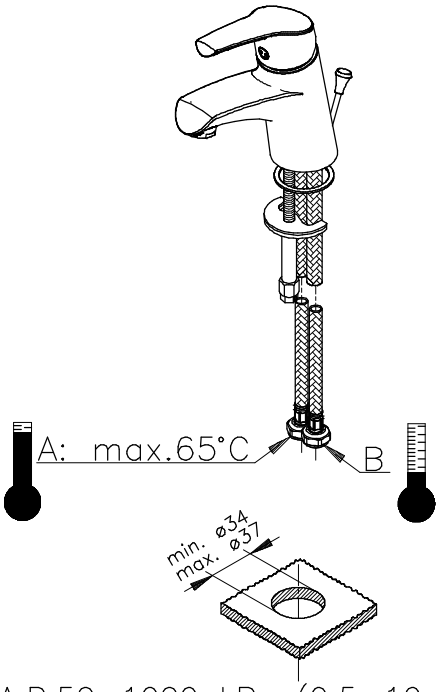

A

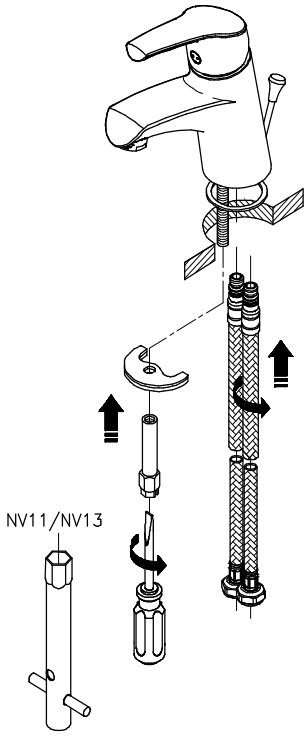

B

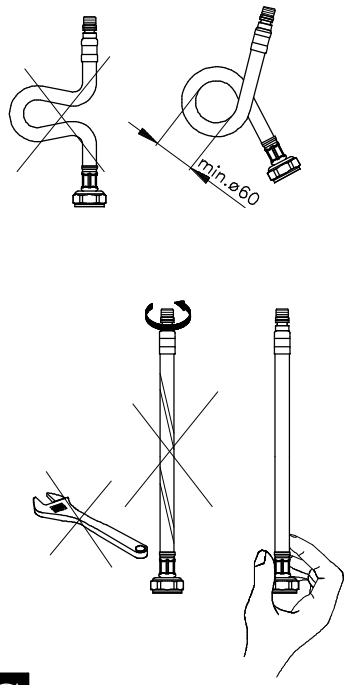

C



D

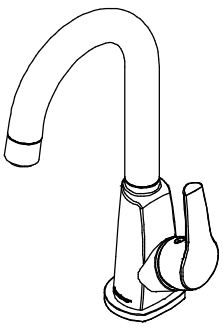

67016

[1]

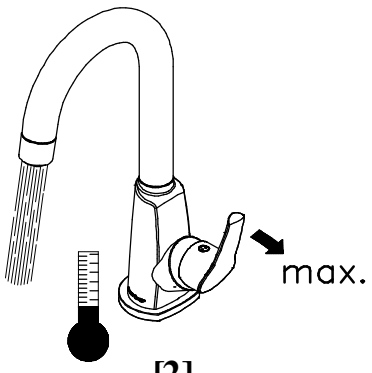

[2]

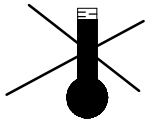

E

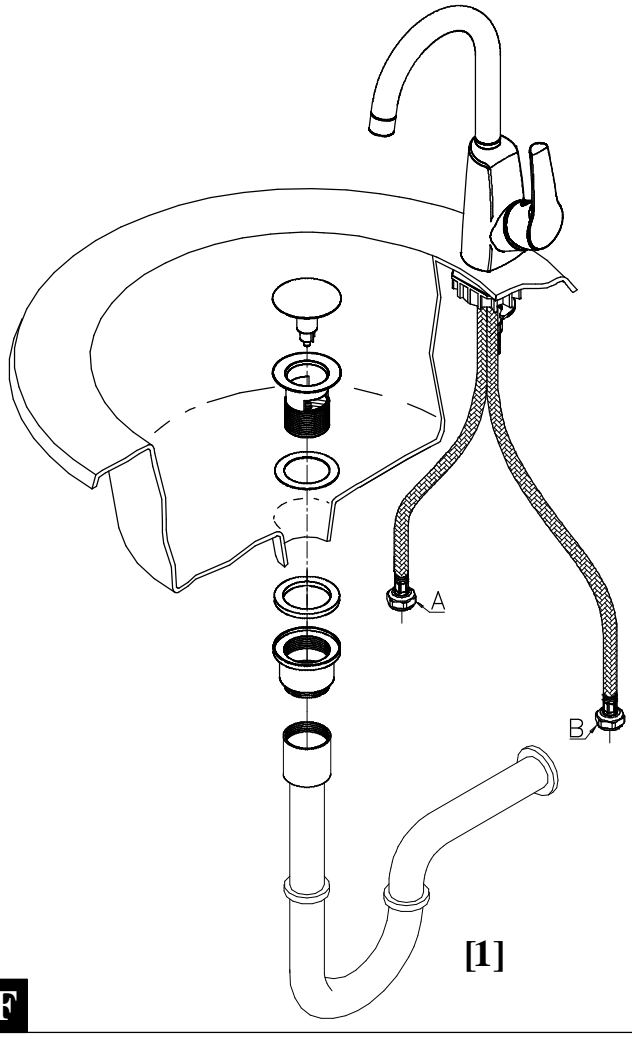

[1]

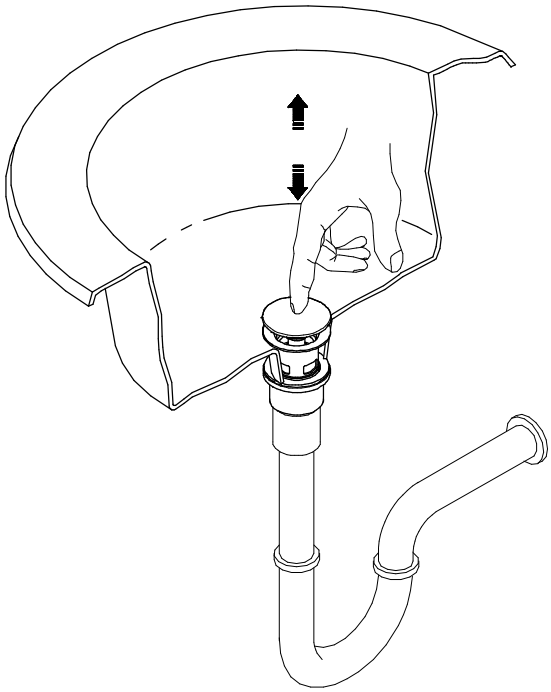

[2]

F

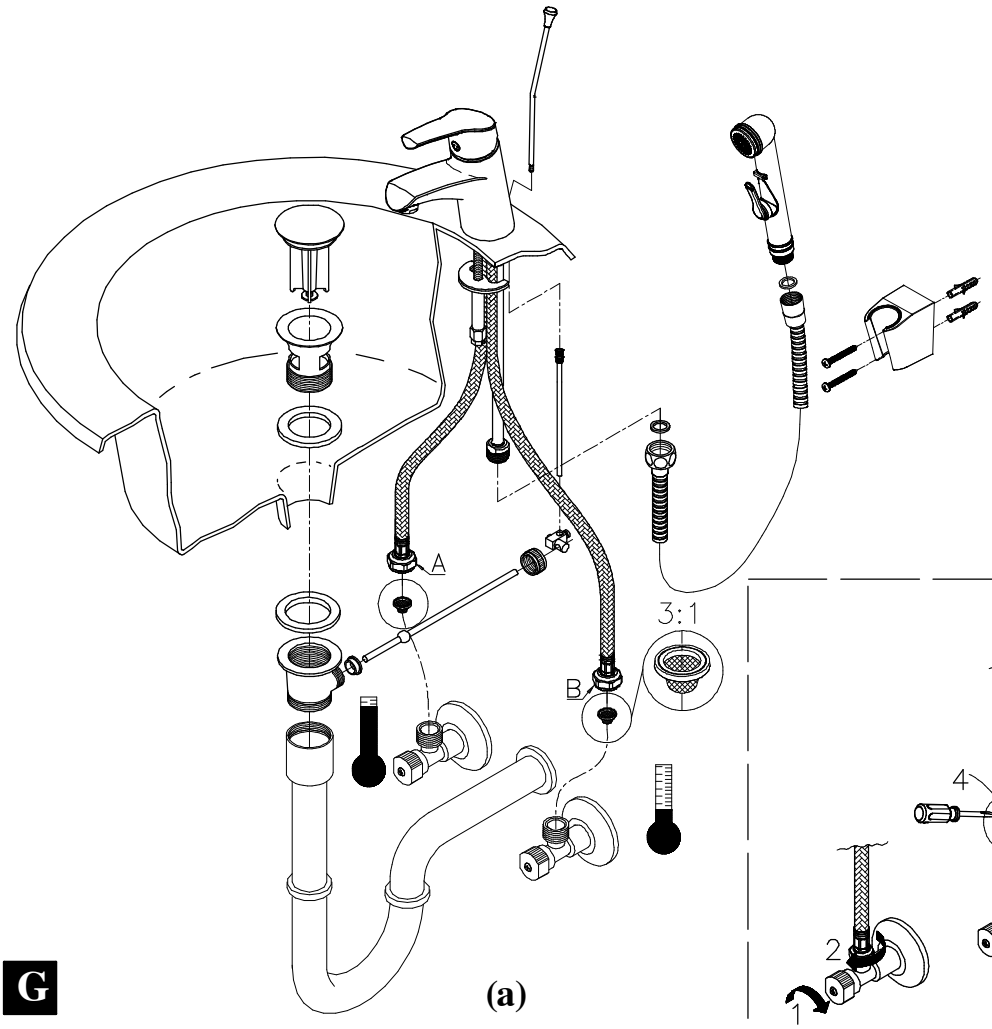

(a)

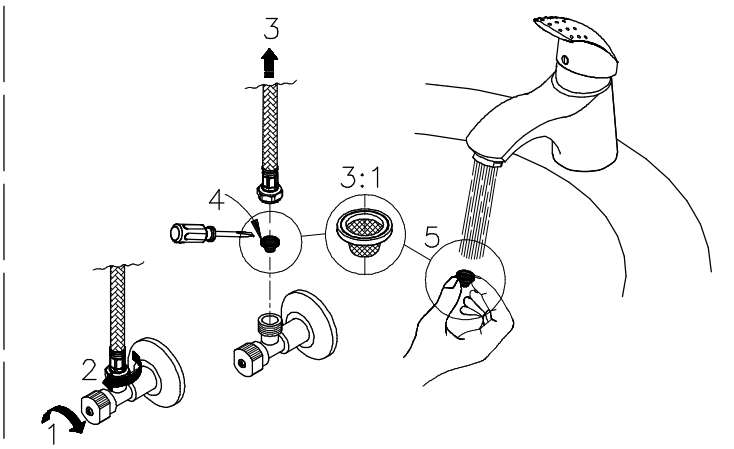

G

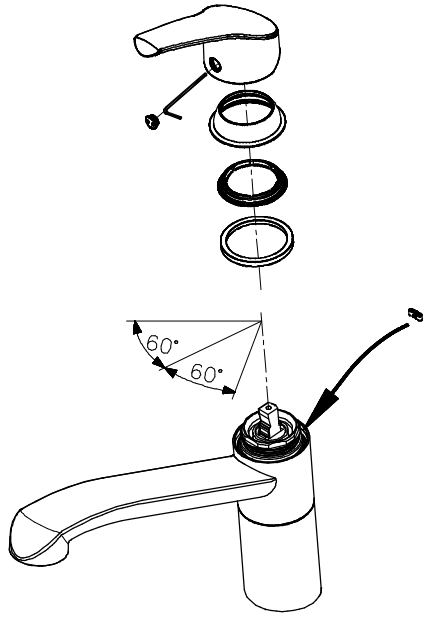

(a)

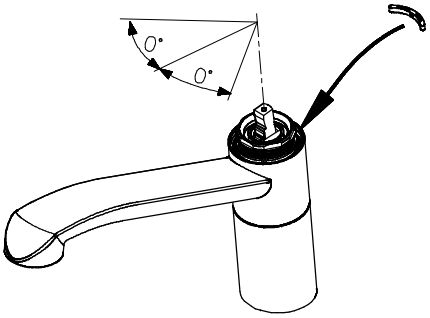

(b)

H

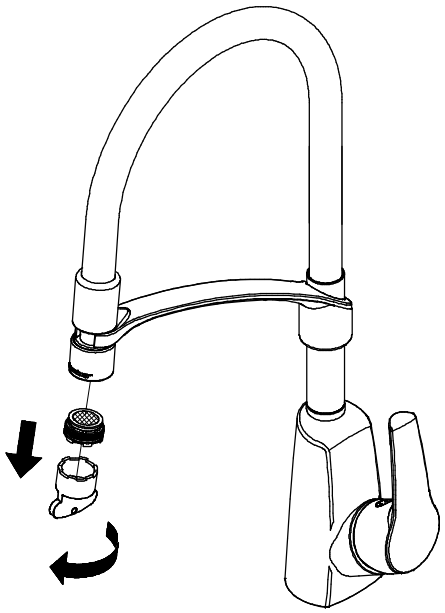

I

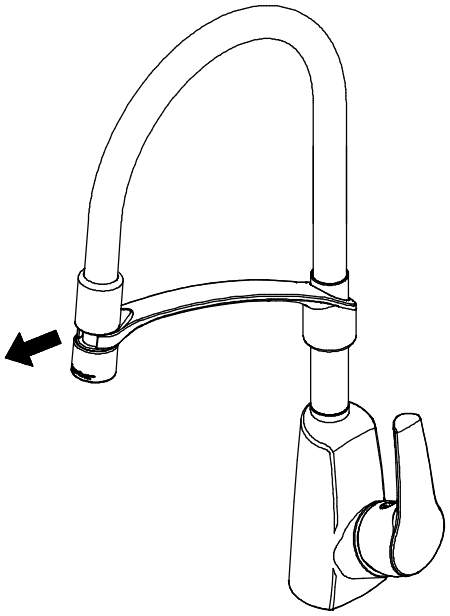

[1]

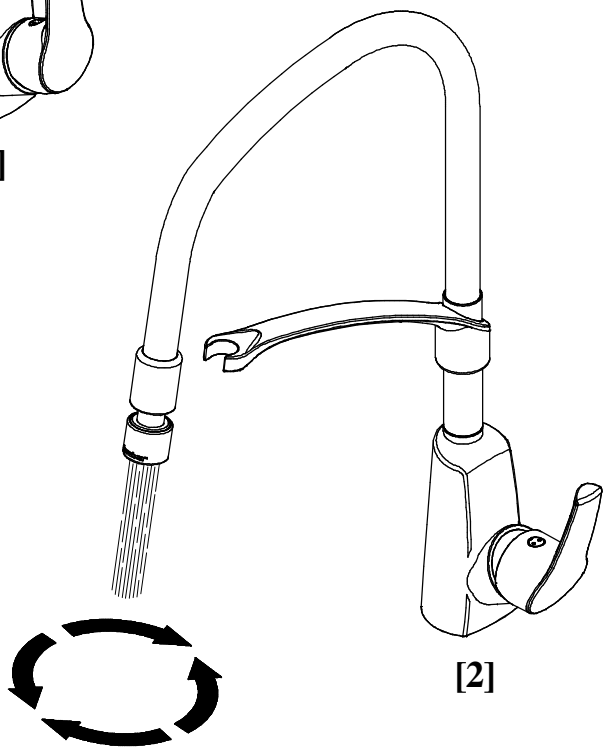

[2]

J

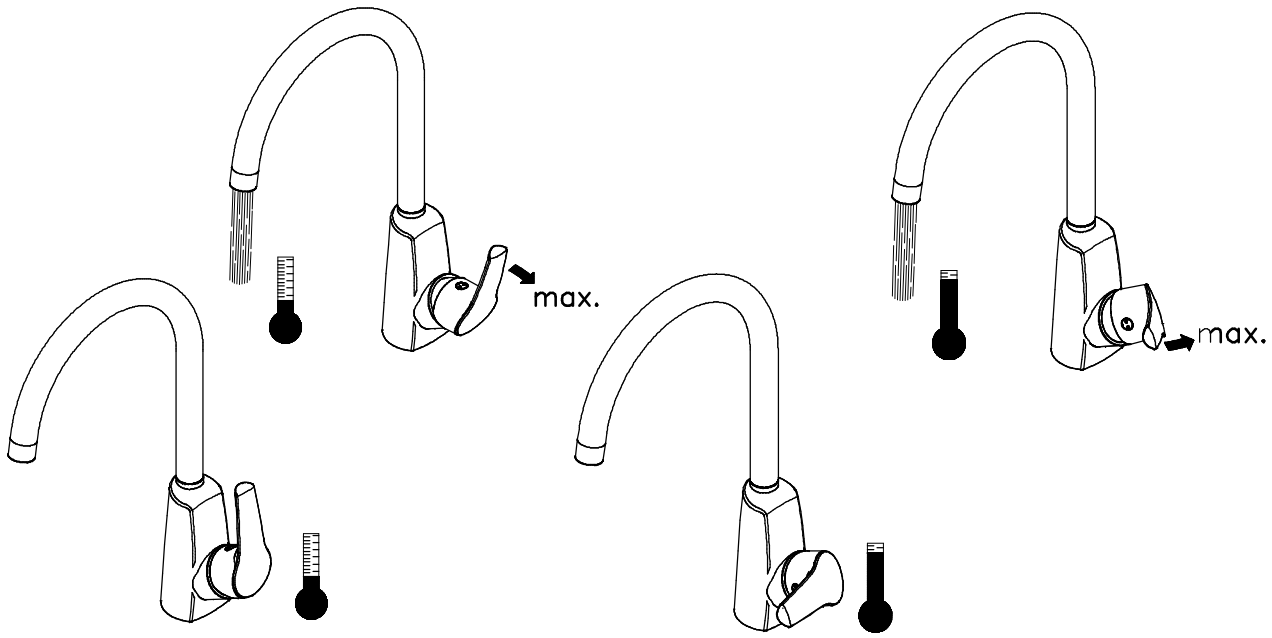

K

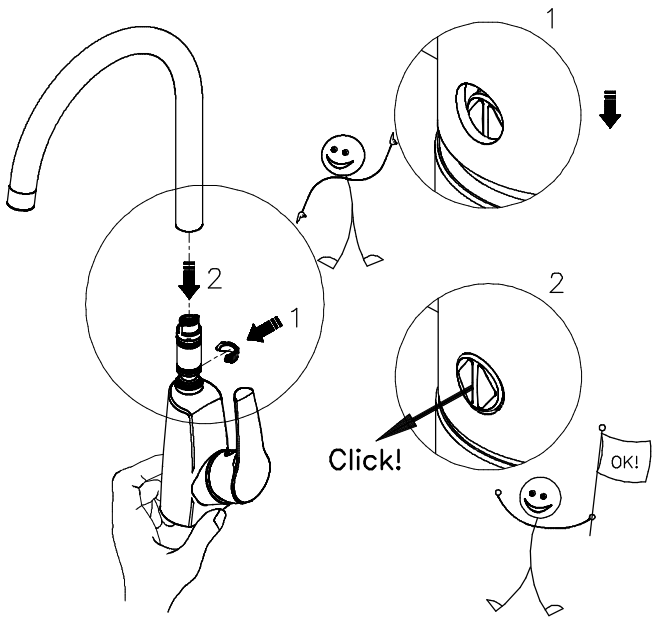

L

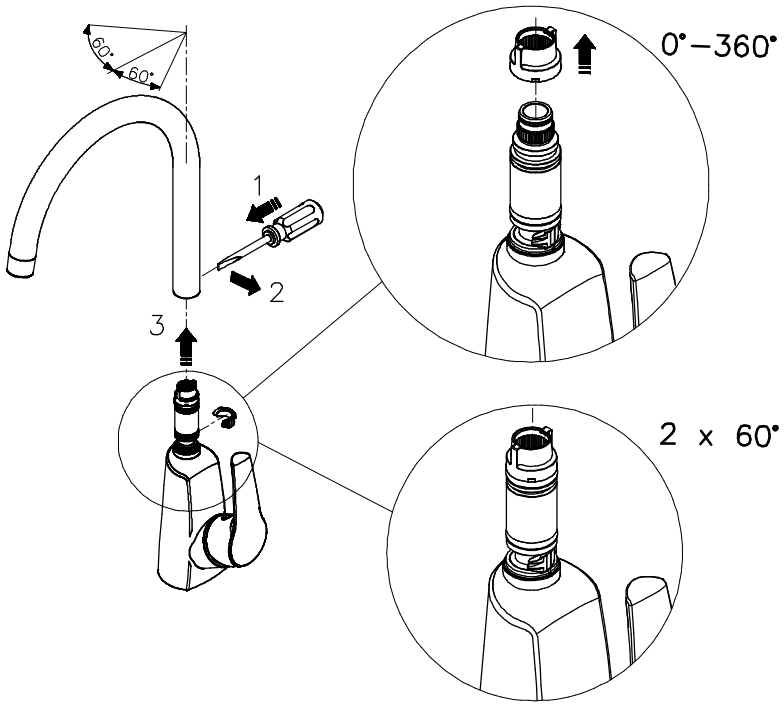

M

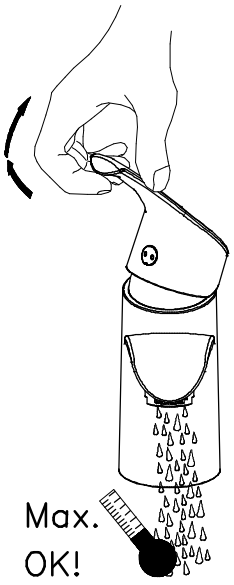

[1]

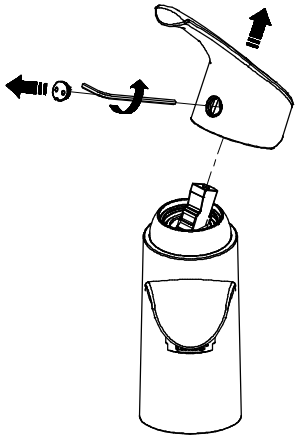

[2]

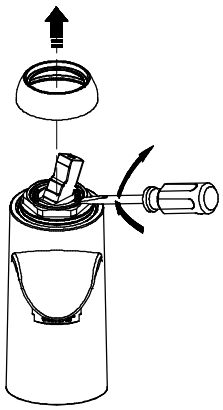

[3]

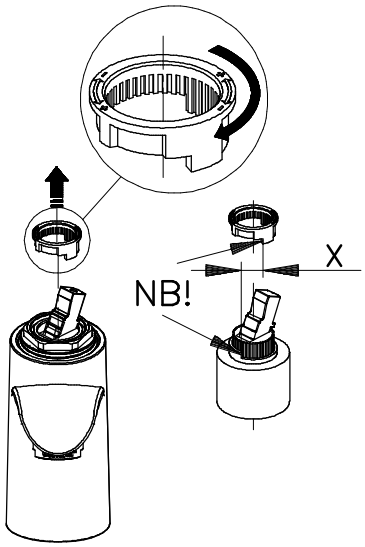

[4]

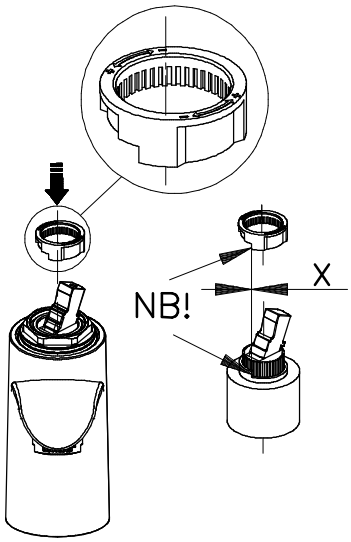

[5]

N

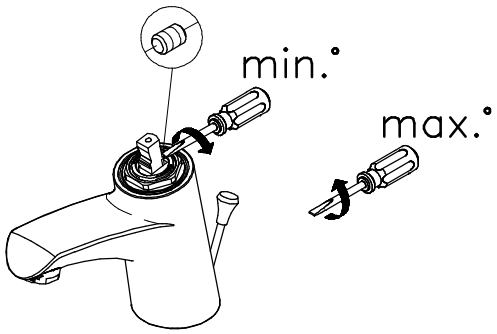

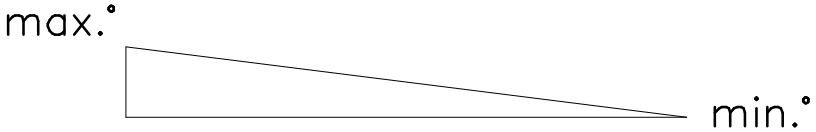



O



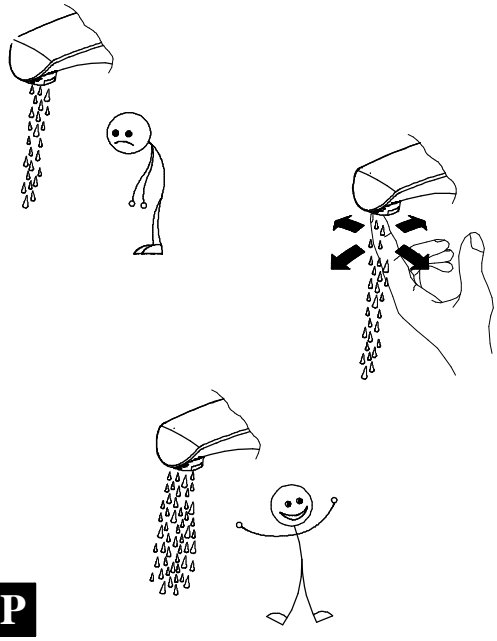

P