**Installationsvejledning**
**Montageanweisung**
**Installation instruction**
**Instructions d'installation**
**Istruzioni di installazione**
**Installatie instructies**
**Instrucciones de instalación**

damixa

**Hvidkærvej 48, 5250 Odense SV, Denmark**
**Tel. +45 88 330 034**
**damixa-international@fmmattssongroup.com**
**www.damixa.com**

01.23 20182.00

**Silhouet**

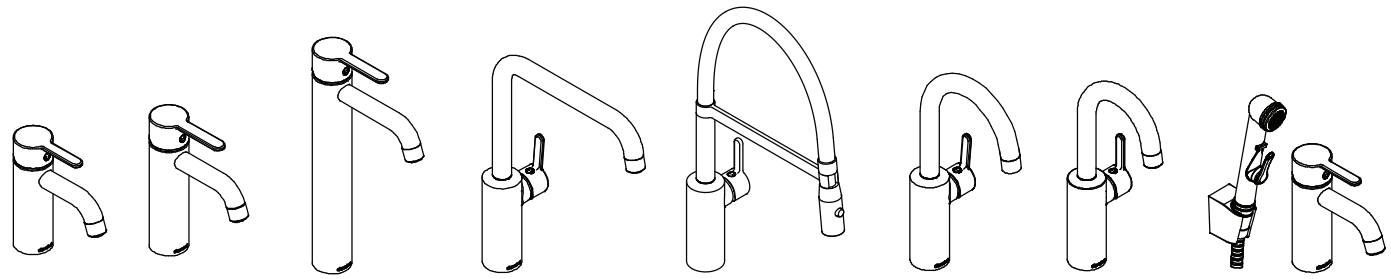

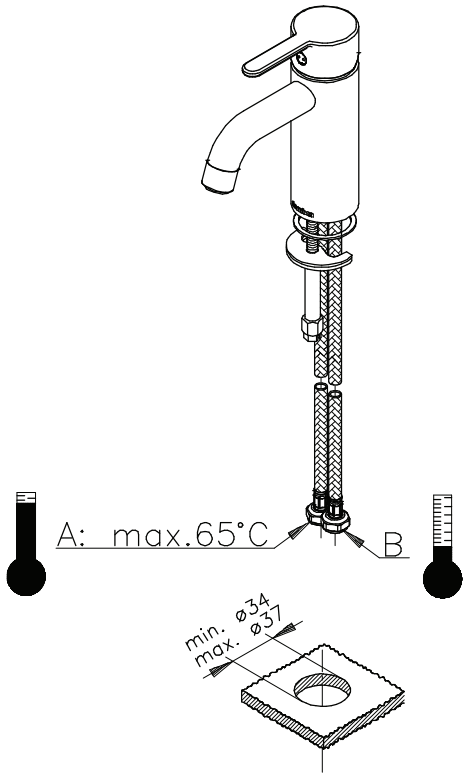


A,B:50–1000 kPa (0.5–10 bar)

**A**

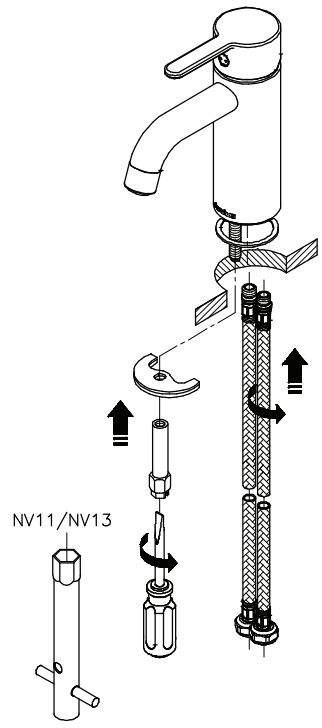


**B**

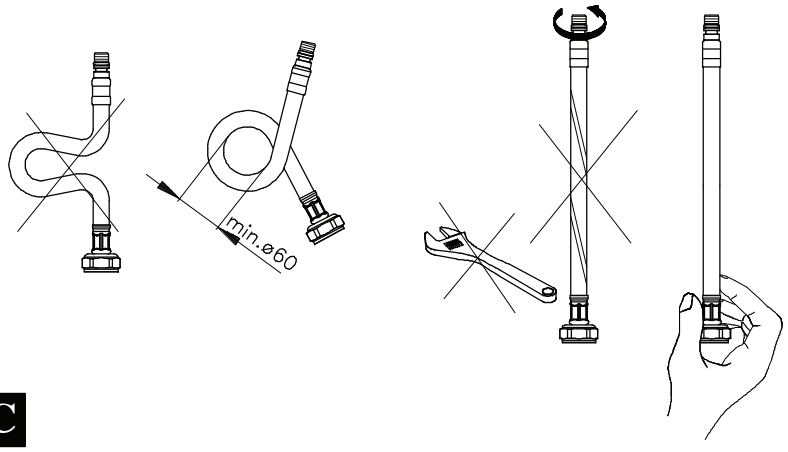


**C**

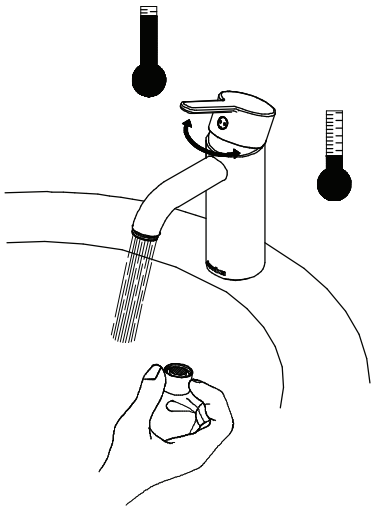

**D**

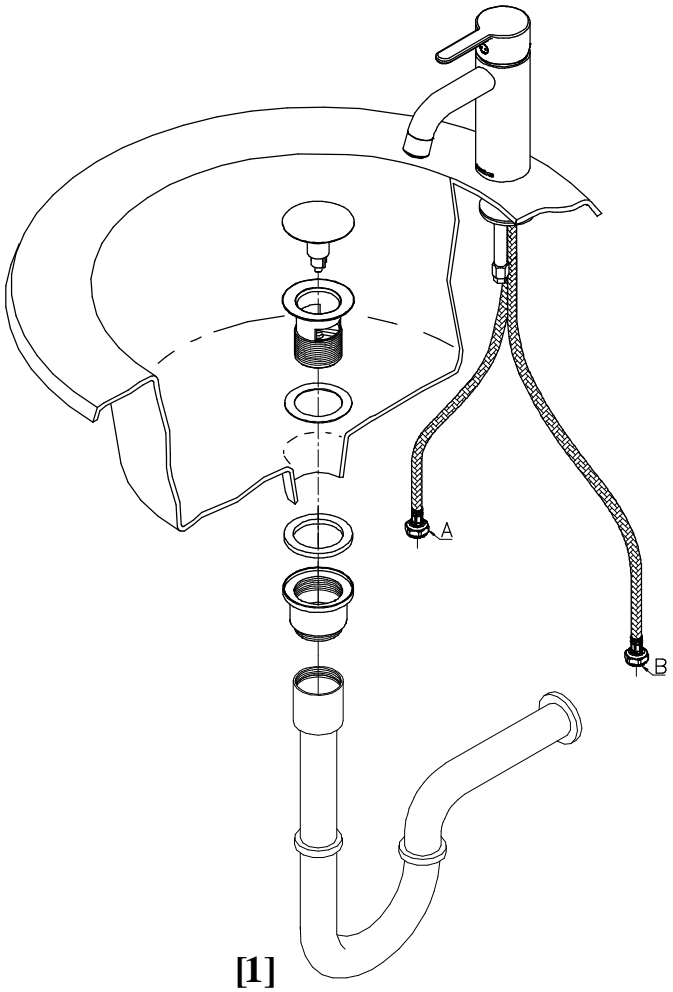


[1]

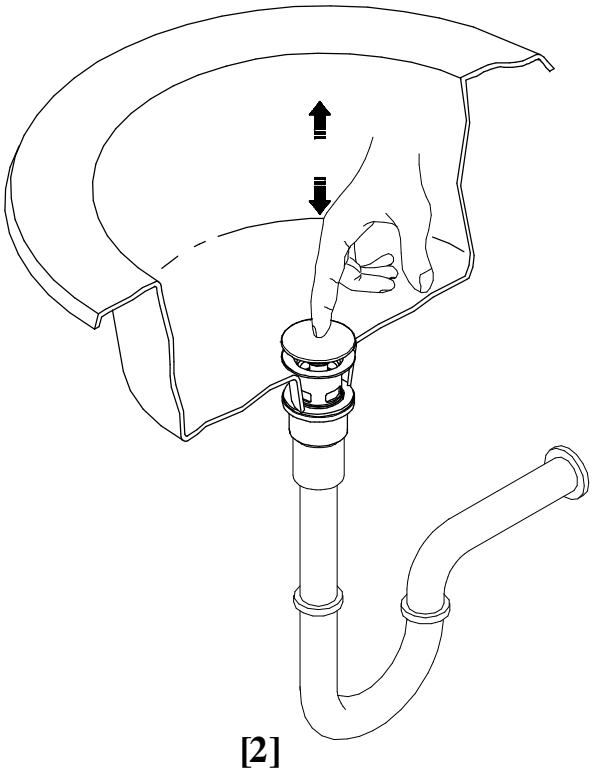

[2]

**E**

74128

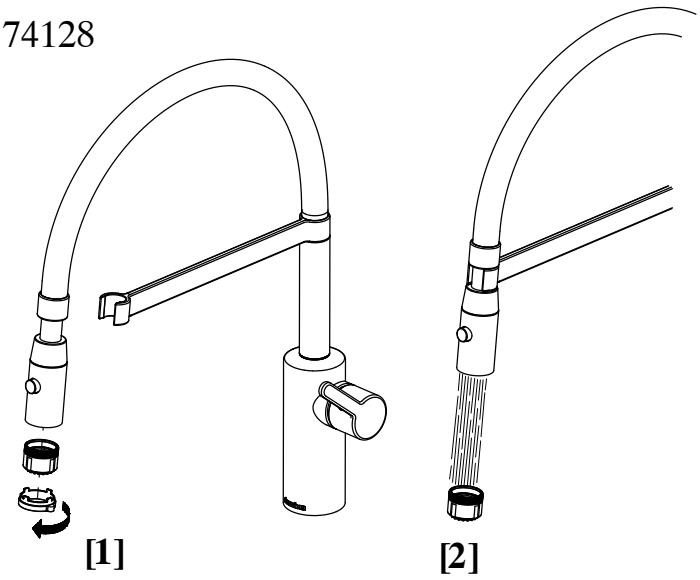

[1] [2]

**F**

74030

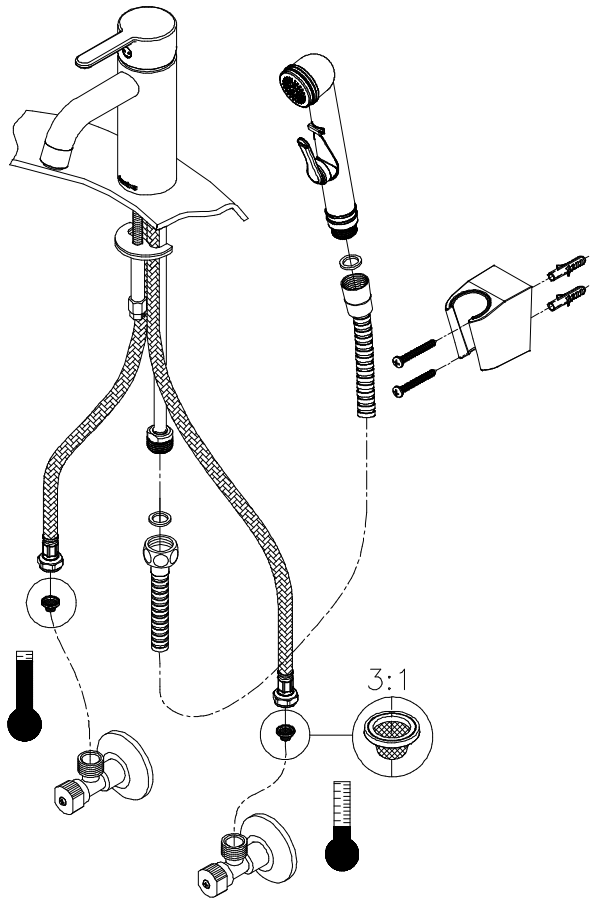


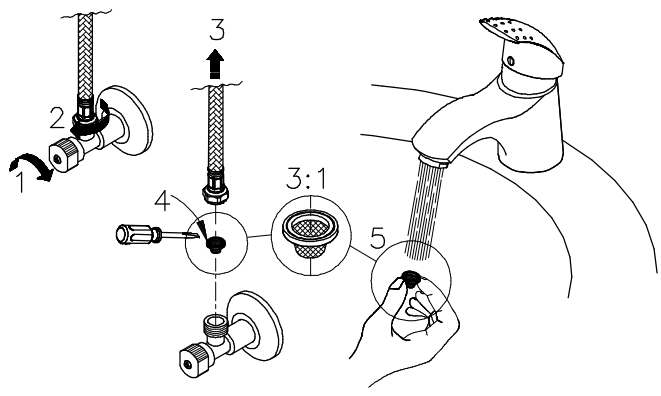


**G**

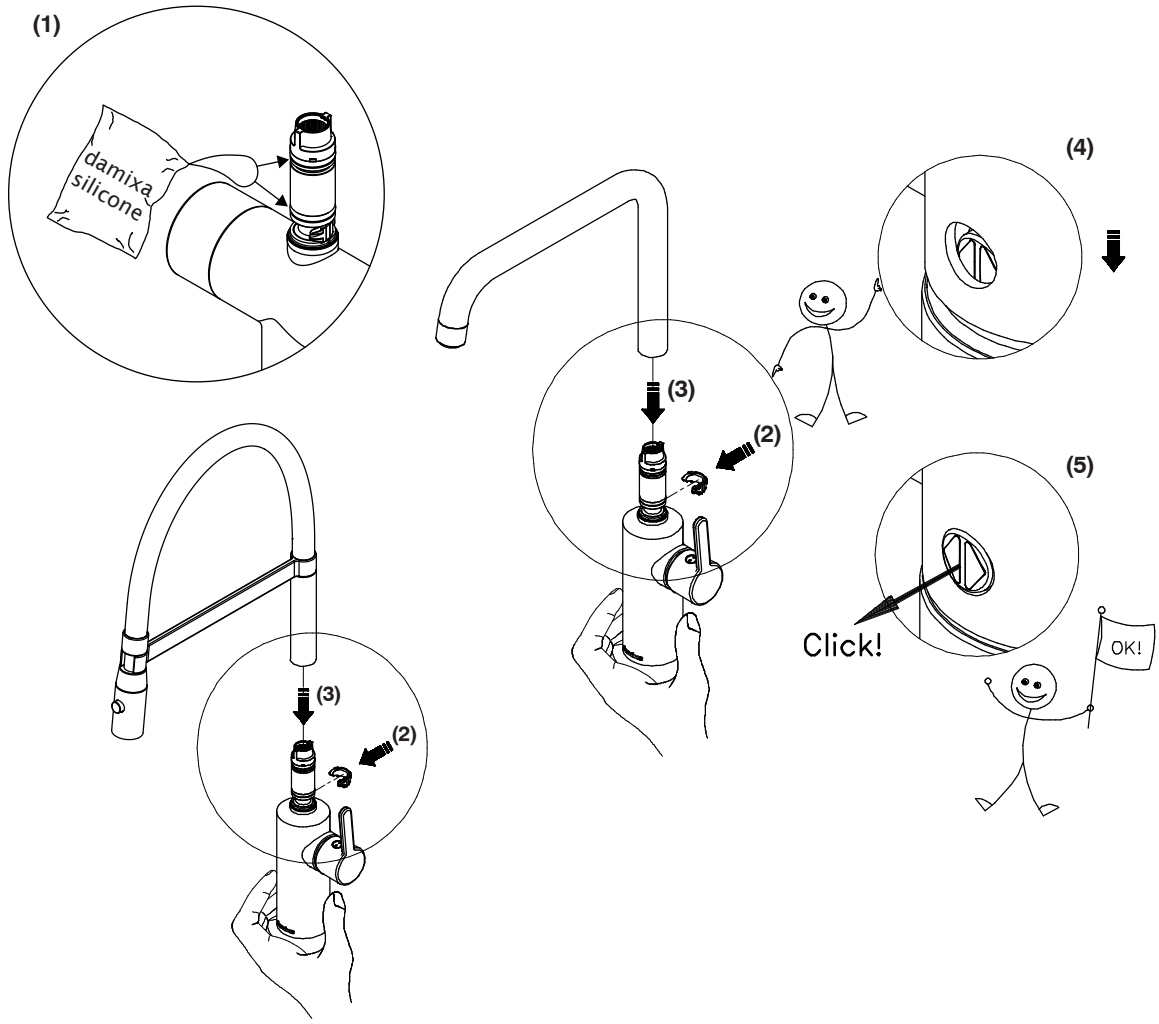
(1)
damixa silicone
(4)
(3)
(2)
(5)
Click!
OK!
(3)
(2)

**H**

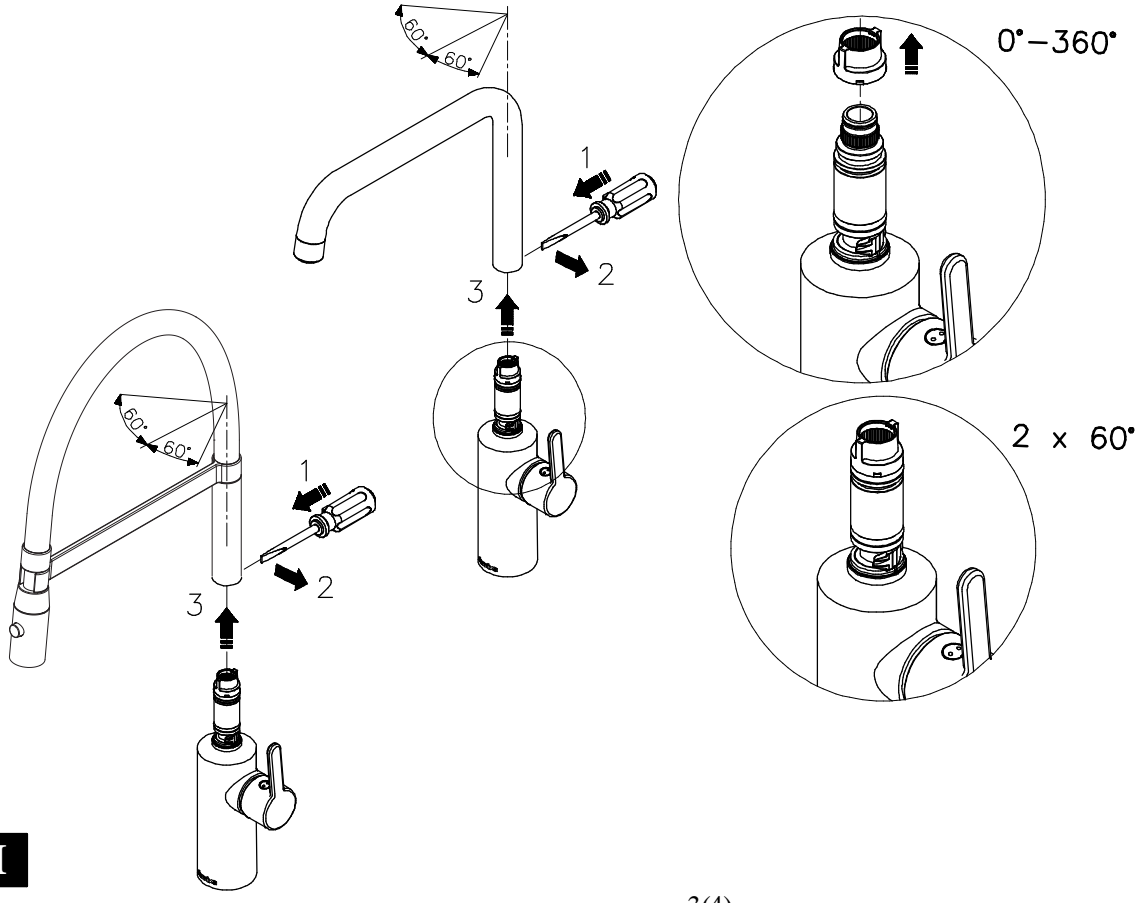
60°
60°
1
2
3
0°–360°
2 x 60°
60°
60°
1
2
3

**I**

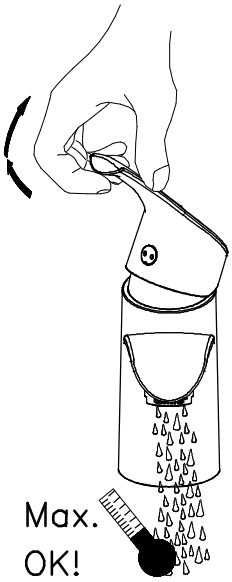


[1]

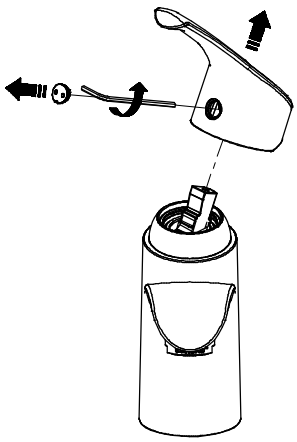

[2]

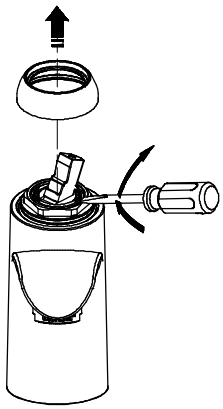

[3]

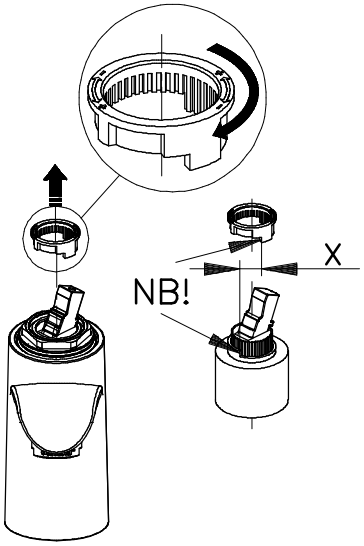


[4]

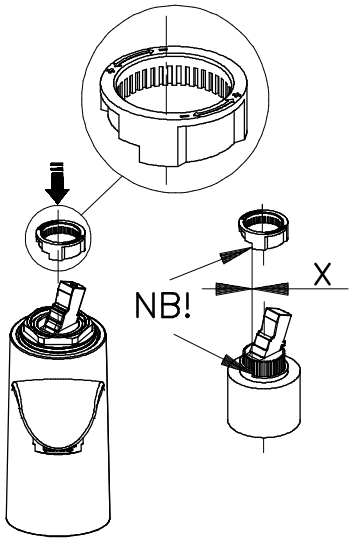


[5]

**J**

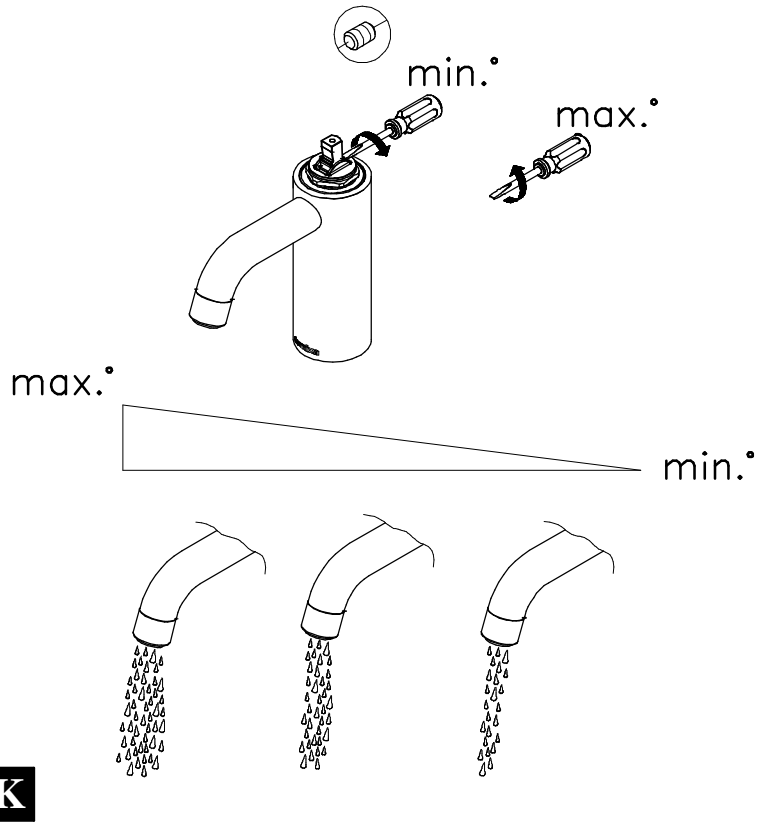


**K**

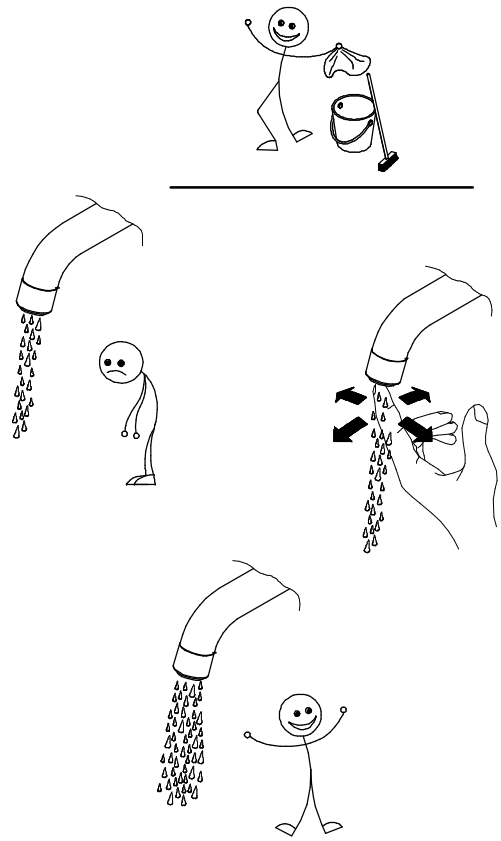

**L**