1. Application:

Article code	Article descriptions according to PRICE LIST	EAN13
A50VBC00L	(vertical outlet) Waste valve with rubber plug and vacuum suction pads	5603687900691

2. Dimensions and components list:

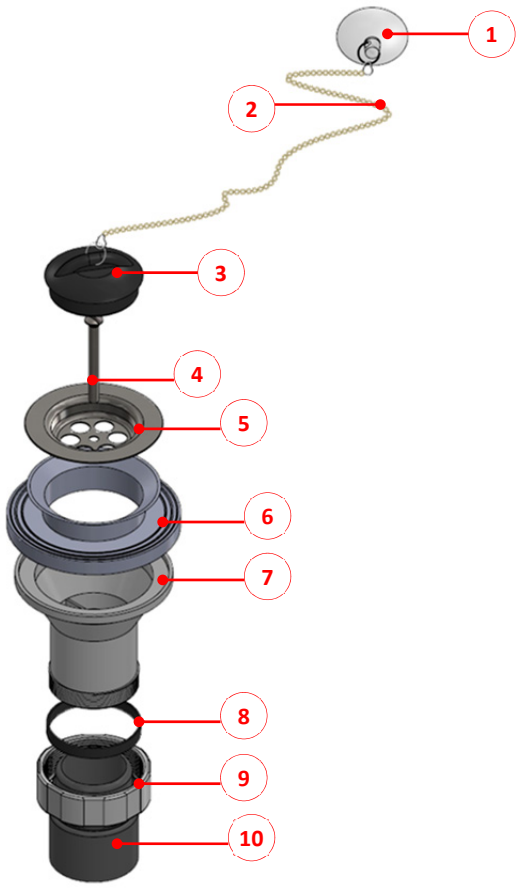

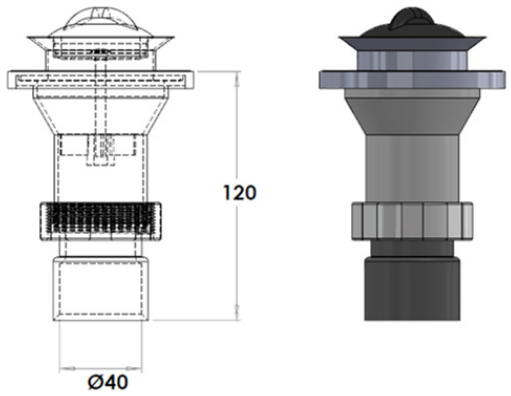

Nº	Components	Qnt.
1	Rubber vacuum suction pad	1
2	Ball chain with rings 380mm	1
3	Rubber plug	1
4	*Screw M4 – 65mm*	1
5	*Jumber plate*	1
6	*Rubber double- seal*	1
7	Waste valve cone PVC	1
8	Conic O-ring rubber	1
9	Sleeve nut	1
10	Glue- on PVC Ø40 outlet connector	1

3. Primary packaging description:

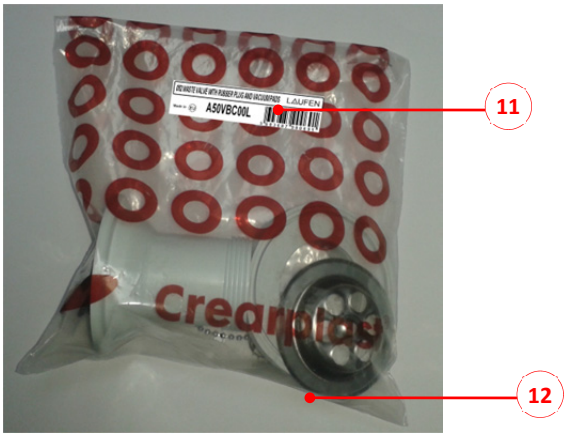

Nº	Components	Qnt.
11	EAN13 / article code label	1
12	Plastic bag	1

Unit weight: ≈200g