OEM Alpha Room sensor direct

The OEM Alpha Room sensor direct is a high-quality room thermostat in modern design for the registration and regulation of the desired room temperature, offering maximum user comfort.

The OEM Alpha Room sensor direct is available for the operating voltages 24 V and 230 V. A simple room-by-room temperature control is already possible with directly connected valve actuators. In conjunction with the connection unit OEM Alpha Basis direct, a perfectly matched overall system for surface temperature adjustment can be realized.

The desired room temperature can be set comfortably via the set value element, which is protected from unauthorized access by a housing cover.

Two versions can be chosen in order to comply with the desired installation requirements. Depending on the selection, applications for heating or heating/cooling is possible. All versions of the OEM Alpha Room sensor direct are marked by their high-quality appearance, integrating harmoniously into a modern room architecture not least due to their slim design. An optimum price-performance ratio is offered for rooms where only a very good temperature control is desired, without the comfort function of the display variant.



1.1 Features

- Available in two versions: Analogue and Analogue HK
- Versions in 24 V and 230 V
- Flat design and small dimensions (86 x 86 x 26 mm)
- Stand-alone regulation, or to be realised in the system
- Equipment for heating and cooling systems
- Setback input for room temperature reduction
- Valve and antifreeze protection function
- Change-over input
- High-quality, modern OEM design
- High functional security

The Möhlenhoff OEM product quality ensures easy, intuitive installation, operation and maintenance of the entire system.

1.2 Variants

In the basic version, the OEM Alpha Room sensor direct will be delivered as neutral device without logo and in white. The subsequent list shows the available versions.

Type	Model	Operating voltage	Equipment	Scope of supply
R 40003-10	Analogue	24 V	Heating, fixed setback temperature, setback input, antifreeze function	• OEM Alpha Room sensor direct in individual packaging • Instructions in 12 languages
R 40003-40	Analogue HK	24 V	Heating/cooling, fixed setback temperature, setback input, change-over input, cooling disable, valve protection function, antifreeze function	
R 20003-10	Analogue	230 V	Heating, fixed setback temperature, setback input, antifreeze function	
R 20003-40	Analogue HK	230 V	Heating/cooling, fixed setback temperature, setback input, change-over input, cooling disable, valve protection function, antifreeze function	

Möhlenhoff GmbH
Museumstraße 54a
38229 Salzgitter

☏ +49 5341 8475 0
kontakt@moehlenhoff.de
www.moehlenhoff.de

Möhlenhoff

1.3 Equipment

The OEM Alpha Room sensor direct is offered in the versions 24 V and 230 V. Different versions are available; they differ in their functional equipment.

	Analogue	Analogue HK
Heating	✓	✓
Cooling		✓
Cooling disable		✓
Change-over input		✓
Setback input	✓	✓
Fixed setback difference	✓	✓
Valve protection function		✓
Antifreeze function	✓	✓

1.4 Optional differentiations to the basic version

Differentiation possibilities	
Packaging	Individual printing and manufacturing of packaging
Casing	Individual designs, e. g. square, upright, horizontal format, individual colour
Imprint on casing	Marking of the company logo and the individual type designation and the device designation
Installation base	Colour adaptation, form change
Please contact us if you have further wishes.	

2 Function

All room thermostats OEM Alpha Room sensor direct have the same basic functions; further system functions depend on the version and the individual equipment.

2.1 Device overview (Example – Alpha Room sensor direct Ag HK)

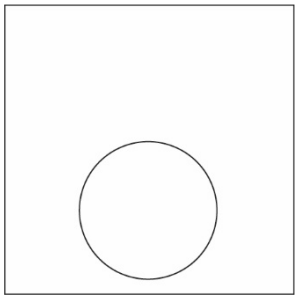

Top view

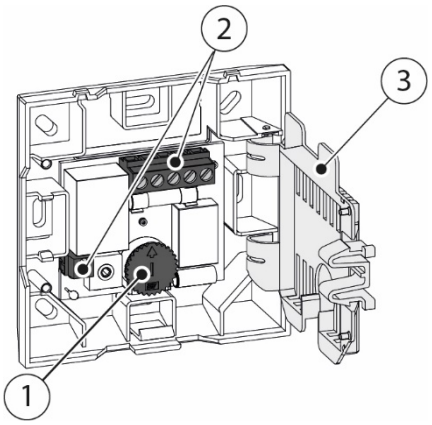

Clamp contacts

1	**Set value element**	• Setting the target temperature - Fixed setback temperature of 2 K
2	**Comfortable clamp terminals**	• Screw terminals - Quick connection of a multi-core connection line for voltage supply and signal transmission
3	**Protective cover**	• Protection against accidental contact of live components

2.2 Protection functions

A valve and an antifreeze protection function are integrated into the thermostat for damage protection purposes:

- **Valve protection function**
  - Cyclic activation of connected actuators, avoids the clogging of valves in times without temperature control
  - Will be activated once every 14 days for 6 minutes after the last triggering
- **Antifreeze function**
  - Avoids the freezing of lines during times without temperature control (e. g. in case of longer absence)
  - Inactive in cooling operation

2.3 Operation

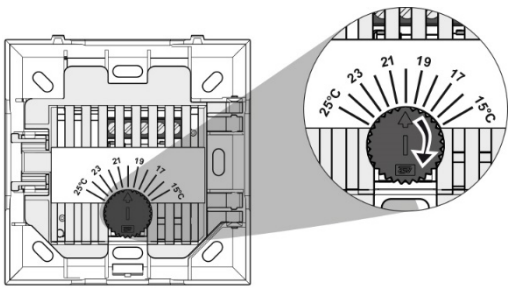

The desired room temperature can be set comfortably via the set value element, which is protected from unauthorized access by a housing cover.

3 Technical data

The listed technical data relate to the maximum functional equipment of the OEM Alpha Room sensor direct. Individual positions may be omitted depending on the model.

		24 V variant		230 V variant	
		Analogue	**Analogue HK**	**Analogue**	**Analogue HK**
Type		R 40003-10	R 40003-40	R 20203-10	R 20203-40
Operating mode		Heating	Heating/Cooling	Heating	Heating/Cooling
Operating voltage		24 V ±20 % 50 Hz		230 V ±10 % 50 Hz	
Voltage supply		via base/transformer		via base/mains connection	
Power consumption in idle operation		<0.3 W			
Switching element		Triac	Triac	Relay	Relay
Switching power		1 A ohmic load		1.8 A ohmic load, 200 VA inductive	
Fuse		T1A		T2AH	
max. number of connectible actuators		5 (max. 3 W/actuator)		10 (max. 3 W/actuator)	
Nominal current without actuators		≤ 20 mA	≤ 20 mA	≤2 mA	≤2 mA
Max. admissible power consumption of connected actuators		1 A	1 A	1.8 A	1.8 A
Control direction of actuators to be connected		NC			
Target temperature setting range:		10 °C to 28 °C			
Target temperature resolution		0.25 °C			
Actual temperature registration (int. sensor)		0 – 40°C			
Measuring accuracy of internal NTC		± 0.5 K			
Change-over input		-	switchable via potential-free contact	-	switchable via potential-free contact
Cooling disable		-	Yes	-	Yes
Setback input		Yes			
Setback temperature		2 K			
Antifreeze temperature		Normal operation: 10 °C / setback: 8 °C			
Valve protection function		-	once every 14 days for 6 minutes	-	once every 14 days for 6 minutes
Admissible ambient temperature		0 to 50°C			
Admissible storage temperature		-25 to +75 °C			
Admissible ambient humidity		80%, not condensing			
Ball pressure test temperature		Connection terminals 100 °C, plastic housing 75 °C			
Type of installation		On-surface wall installation			
Connection line		NYM-J 5 x 1.5 mm²	NYM-O 5 x 1.5 mm²	NYM-J 5 x 1.5 mm²	NYM-O 5 x 1.5 mm²
Connection terminals	Analogue	5 screw terminals - 0.22 mm² to 1.5 mm²			
	Analogue HK	7 screw terminals - 0.22 mm² to 1.5 mm²			
Protection class		III		II	
Degree of protection		IP 20			
Rated surge voltage		1500 V			
Contamination degree		2			
Mode of action		Type 1	Type 1	Type 1.C	Type 1.C
Material		PC + ABS			
Surface structure		anodised			
colour		Signal white (RAL 9003)			
Weight		90 g			
Dimensions (W x H x D)		86 x 86 x 26 mm			

3.1 Dimensions

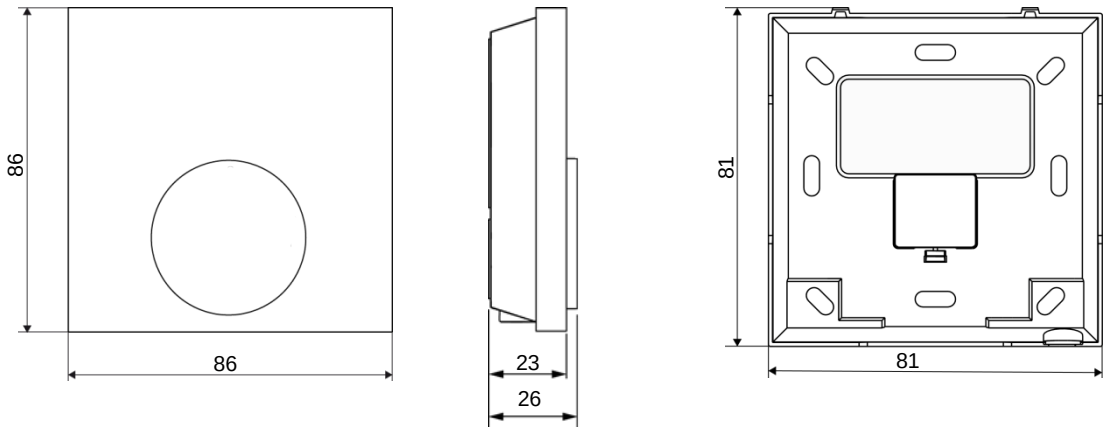

All indications in mm

3.2 Approvals and certificates

In addition to our numerous internal function and quality tests, all Möhlenhoff products are tested by independent testing institutes.

CE

TÜVRheinland

The product is certified by the TÜV Rheinland.

4 Installation notes

Electrical installation planning documents
The electrical installations must be performed according to the current national VDE regulations as well as according to the regulations of your local electric power utility company, by an authorised and trained electrician, and in de-energised state.

The installation of the OEM Alpha Room sensor direct can be performed in a few simple, comfortable and intuitive steps.

4.1 Installation place

A freely accessible area is recommended for installation in order to allow the OEM Alpha Room sensor direct to detect the correct room temperature. There must be no additional heat sources at the installation position which could affect the thermostat.

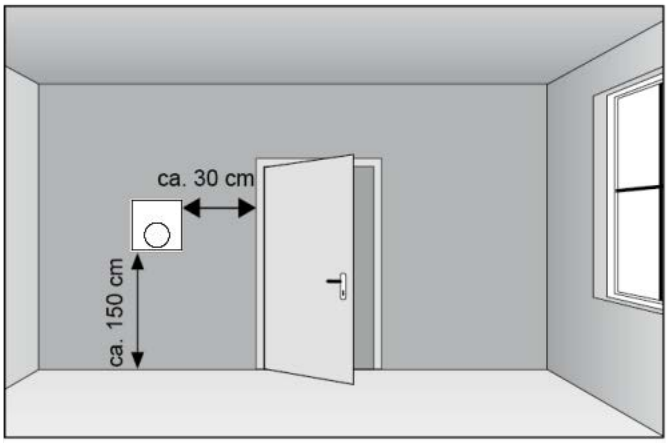

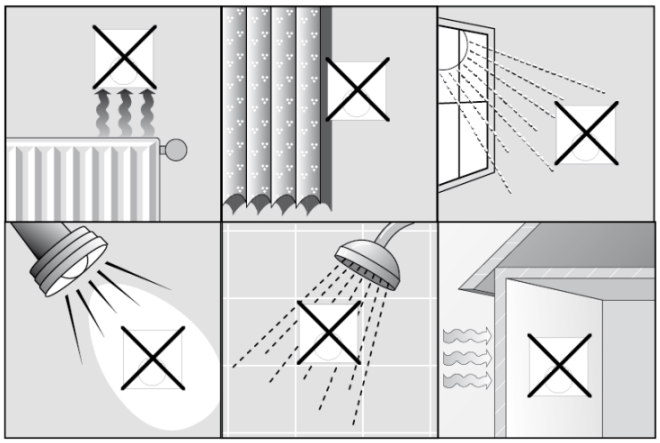

4.2 Installation

The OEM Alpha Room sensor direct is installed comfortably on-surface or in a flush-type box in a few simple steps.

1

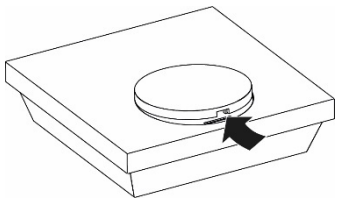

2

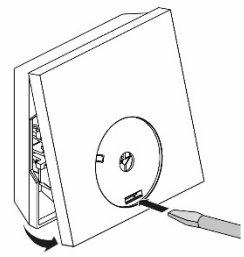

3

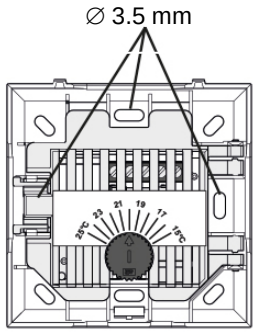

4

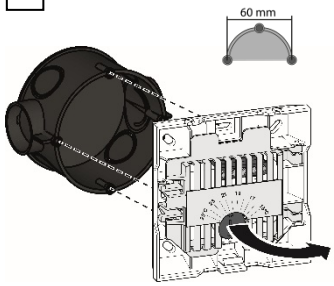

5

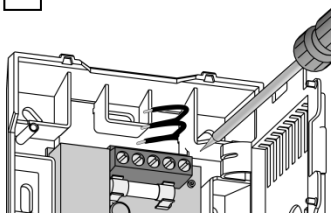

6

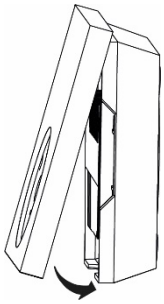

7

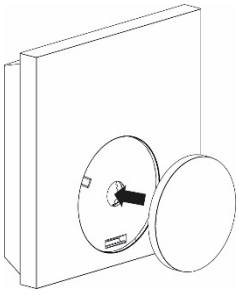

4.3 Electric connection

The wiring between the OEM Alpha Room sensor direct and the components to be connected is realised with a multi-core cable.

Analogue

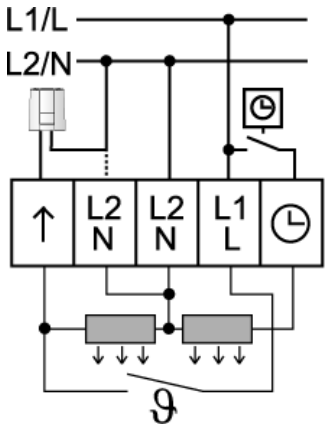

Analogue HK

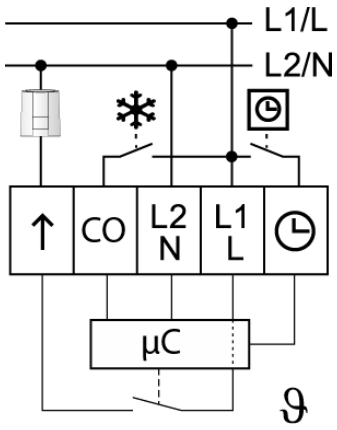

- Mains connection
  - Voltage supply via OEM Alpha Basis direct or via an external voltage source
- Setback input
  - Reception of an external setback signal for the time-controlled reduction of the room temperature, from an OEM Thermostat Alpha direct Control, or an OEM Alpha Basis direct Control, or an external system clock.
- Change-over input
  - Toggle between heating and cooling via an external signal (potential-free contact)
- Connection for actuators

4.4 Cooling disable

For the room thermostats Analogue HK, the cooling function can be disabled by inserting a cable bridge. For this, the two contacts of the lower left two-fold terminal must be bridged.

1

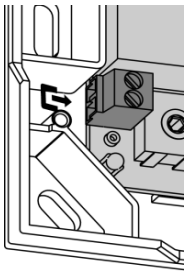

2

